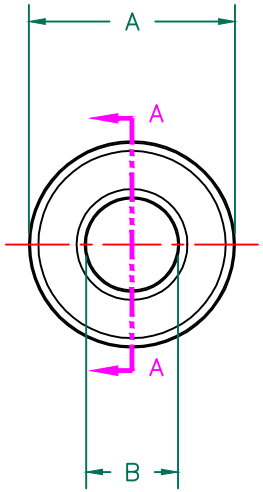

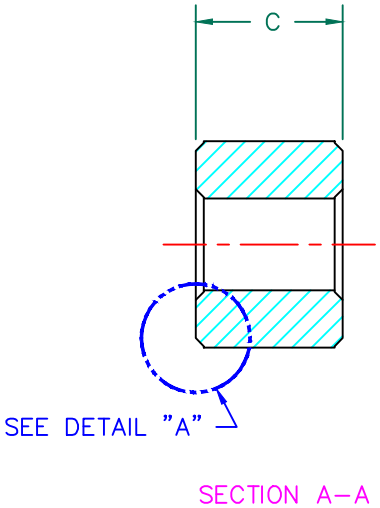

IMPEDANCE (Z)			
Frequency	25 MHz	100 MHz	300 MHz
Nominal (REF)	69 Ω	145 Ω	270 Ω
Minimum	- Ω	116 Ω	- Ω

Z vs. FREQUENCY
(REF. ONLY)

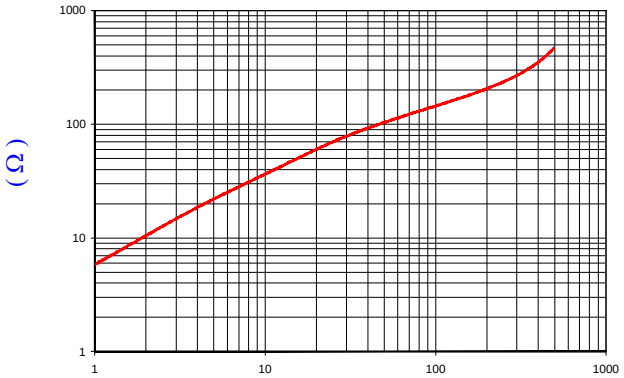

AGILENT E4991A Impedance/Material Analyzer
HP 16092A Test Fixture, REF#2999

UNCONTROLLED DOCUMENT

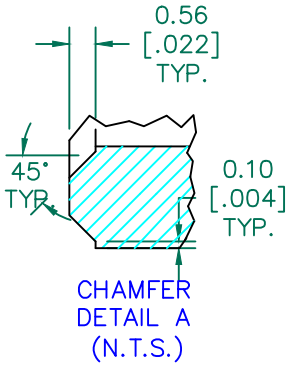

FERRITE CORE DIMENSIONS (SPEC): mm [in]

A	14.27 [.562]	±	0.25 [.010]
B	6.35 [.250]	±	0.15 [.006]
C	10.16 [.400]	±	0.25 [.010]

WEIGHT/1000 6.30 kgs 13.9 lbs

NOTES: UNLESS OTHERWISE SPECIFIED

1. COSMETIC SPECIFICATION REFER TO WI–QA–038.

SCALE DRAWING 1:1

28B0562–000

RoHS

DIMENSIONS ARE IN mm [INCHES].

REV	DESCRIPTION	DATE	INT
J	UPDATE THE LOGO	05/13/15	QIU
K	CHG CHAMFER DESIGN BACK TO ANGLED	04/10/09	JRK
J	CHG CHAMFER DESIGN UPDATE LOGO	03/20/09	JRK
H	UPDATE MIN Z SPEC & COMPANY LOGO	07/10/07	JRK
G	UPDATE MIN Z SPEC @100 MHZ	10/04/06	JRK
F	UPDATE MIN Z SPEC, ADD TEST REF	12/3/04	JRK

This print is the property of Laird Tech. and is loaned in confidence subject to return upon request and with the understanding that no copies shall be made without the written consent of Laird Tech. All rights to design or invention are reserved.

Laird

PROJECT/PART NUMBER:	REV	PART TYPE:	DRAWN BY:
28B0562–000	L	CNZ CORE	DJB

DATE:	SCALE:	MATERIAL:
12/18/91	2 : 1	Ferrite

CAD #	TOOL #
28B0562–000–L	B0562