Copyright FCI.

FCIconnect.com

PRODUCT NUMBER
SEE P/N SCHEME

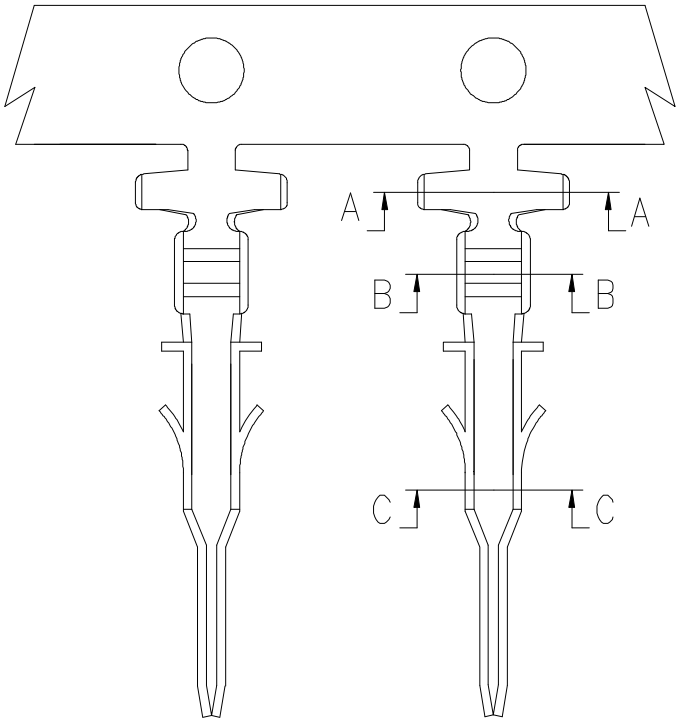

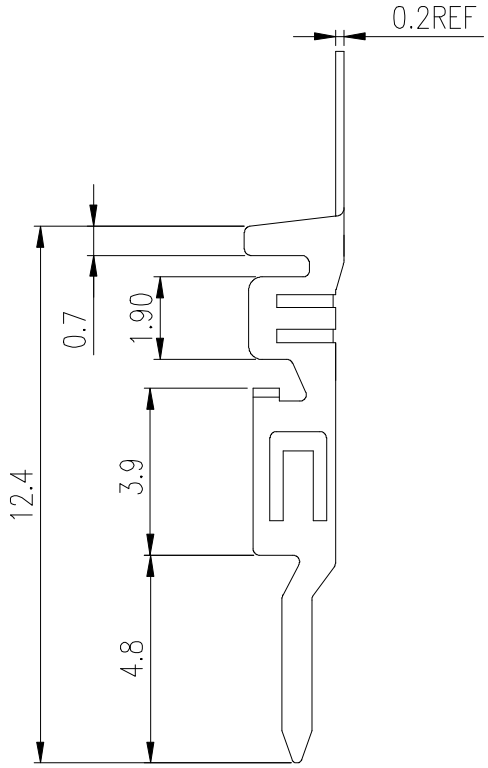

NOTES:

1. TERMINAL MATERIAL: PHBR.
2. PLATING: MIN. 30u" NICKEL OVERALL UNDERPLATING. OPTIONAL PLATING ON CONTACT AREA.
3. PLATE TYPE: PRE-TIN PLATED.
4. Q'TY/REEL: 10,000 PCS
5. APPLICABLE WIRES: AWG#30~#20, INSULATOR O.D: 1.27~1.85mm.
6. THIS TERMINAL IS USED WITH FCI PLUG HSG 10127717.
7. PRODUCT SPECIFICATION: GS-12-1177.
8. PACKAGE SPECIFICATION: GS-14-2359.
9. PRODUCT NUMBER SCHEME:

10127719-00XLF

PLATING CODE
1: 80u" TIN OVERALL
2: GOLD FLASH

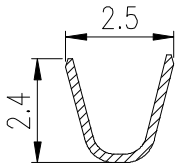

SEC A-A

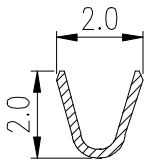

SEC B-B

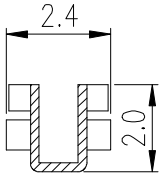

SEC:C-C

mat'l. code				surface	tolerance	projection	product family
ltr	ecn no	dr	date	tolerances unless otherwise specified			title
A		TAI	2013-10-21	angles	linear X.X ±0.3	MM	PLUG CRIMP TERMINAL FOR 3mm PITCH WIRE CONNECTOR
B	ELX-T-17032	TAI	2014-02-25		X.XX ±0.2		
				X°±3°		scale	
				dr	KENNY TAI	2013-10-21	dwg no 10127719 — sheet 1 of 1 — size A4
				engr	KENNY TAI	2013-10-21	
				chr	KENNY TAI	2013-10-21	
				appd	PM ZHENG	2013-11-06	type CUSTOMER Drawing
sheet index	revision	B					
	sheet	1					