NOTES:
1. MATERIALS AND FINISHES:
   BODY - BeCu, GOLD PLATING
   CONTACT - BeCu, GOLD PLATING
   INSULATOR - PTFE
2. ELECTRICAL:
   A. IMPEDANCE: 50 OHM
   B. FREQUENCY RANGE: DC - 26.5 GHz
   C. VSWR(RETURN LOSS): 1.2 (20.8 dB), MAX. DC-10GHz
   1.4 (15.6 dB), MAX. 10-18GHz
   1.5 (14 dB), MAX. 18-26.5GHz
   D. DIELECTRIC WITHSTANDING VOLTAGE: 500 VRMS, MIN.
3. PHYSICAL:
   A. DURABILTIY: 100 CYCLES MIN.
   B. ENGAGEMENT FORCE: 15 LB [67 N] MAX (FOR FULL DETENT)
   C. DISINGAGEMENT FORCE: 2 LB [9 N] MIN (FOR FULL DETENT)
   E. TEMERATURE RANGE: -65° C TO 165° C

THIRD ANGLE PROJ.

REVISIONS				
REV	DESCRIPTION	DATE	ECO	APPR
A	RELEASE TO MFG	06-Jun-07		KL

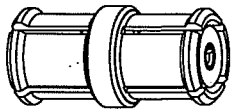

SCALE 6.000

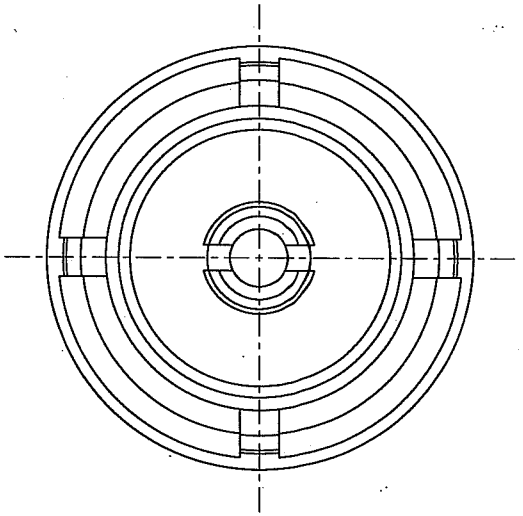

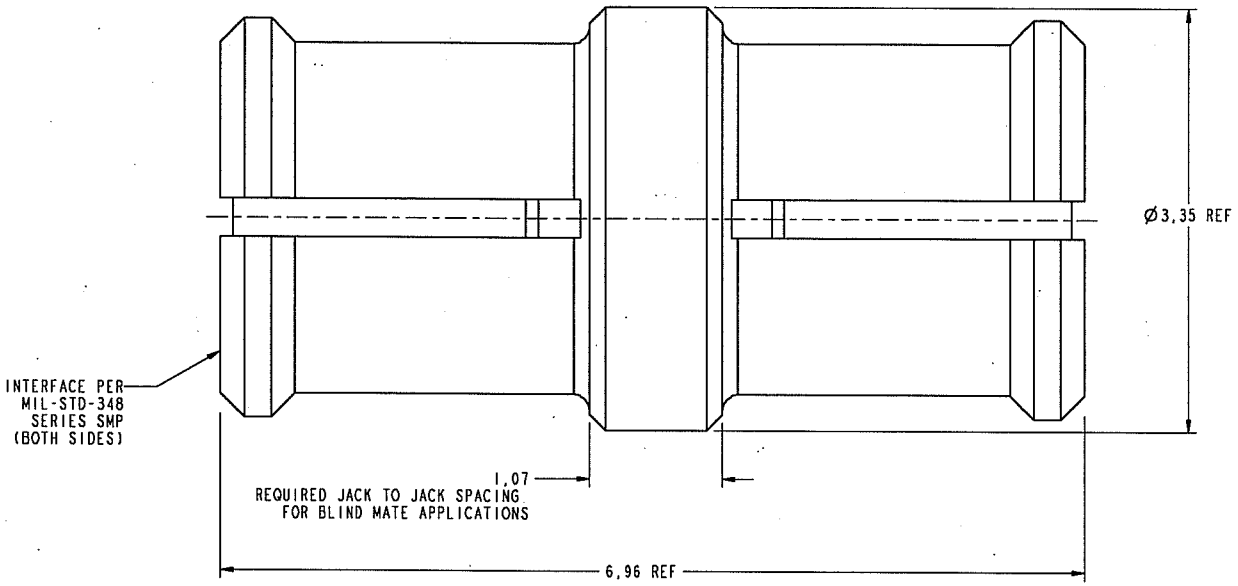

CUSTOMER OUTLINE DRAWING

ALL OTHER SHEETS ARE FOR INTERNAL USE ONLY

UNLESS OTHERWISE SPECIFIED, DIMENSIONS ARE IN METRIC AND TOLERANCES ARE:

0.5 - 6mm	6 - 30mm	30 - 120mm	ANGLES
±0.1mm	±0.2mm	± 0.3mm	±1°

NOTICE - These drawings, specifications, or other data (1) are, and remain the property of Amphenol corp. (2) must be returned upon requiest; and (3) arre confidential and not to be disclosed to any person other than those to whom they are given by Amphenol Corp. the funishing of these drawings, specifications, or other data by Amphenol Corp., or to any other person to anyone for any purpose is not to be regarded by implicatioin or otherwise in any manner licensing, granting rights to permitting such holder or any other sperson to manufacture, use or sell any product, process or design, patented or otherwsie, that may in any way be related to or disclosed by said drawings, specifications, or other data.

MATERIAL
-

REFERENCE
EAR # 2279 AND 615X-2322-100

CONFIGURATION LEVEL: Engineering Change

FINISH

DRAWN	Evan.	DATE 06-Jun-07
ENGINEER	Cissy	DATE 06-Jun-07
APPROVED	[illegible]	DATE 18-Jun-07

CAD FILE
I:\SMP\SMP-FSBA-696

TITLE
SMP BULLET PLUG F-F

SCALE: 25.0:1.0 | SHEET 2 OF 2

DWG SIZE	CODE ID	REV
B	74868	A

Amphenol RF
Danbury CT USA, Tainan, Taiwan, Shenzhen, China
www.amphenolrf.com

DRAWING NO. SMP-FSBA-696
ITEM NO. SMP-FSBA-696
PART NO. SMP-FSBA-696