THIS COPY IS PROVIDED ON A RESTRICTED BASIS AND IS NOT TO BE USED IN ANY WAY DETRIMENTAL TO THE INTERESTS OF PANDUIT CORP.

Material	High Conductivity Seamless Copper Tube
Plating	Electro-Tin
Wire Size & Type	Stranded Copper Flex Cable; 1/0 AWG (275/24) Diesel Locomotive, 1/0 AWG FLEX K,M Class K & Class M
Wire Strip Length	1-7/16 in.
Stud Size	1/4 in.
UL Listed Wire Connector	Yes, for applications up to 35kv. Consult cable manufacturer for voltage stress relief instructions with applications greater than 2000 volts.
UL Temperature Rating	90˚ C
C.S.A Certified Wire Connector	Yes
Panduit Color Code on Barrel	BLACK
Panduit Die Index No. on Barrel	P45
Alternate Industry Die Index No. ( ) on Barrel	(13)

CERTIFIED

LISTED
Wire Connector

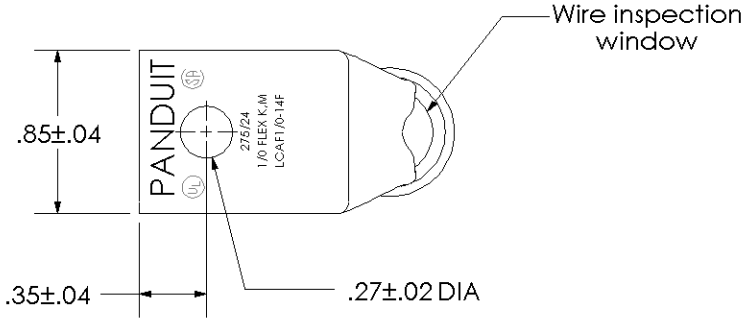

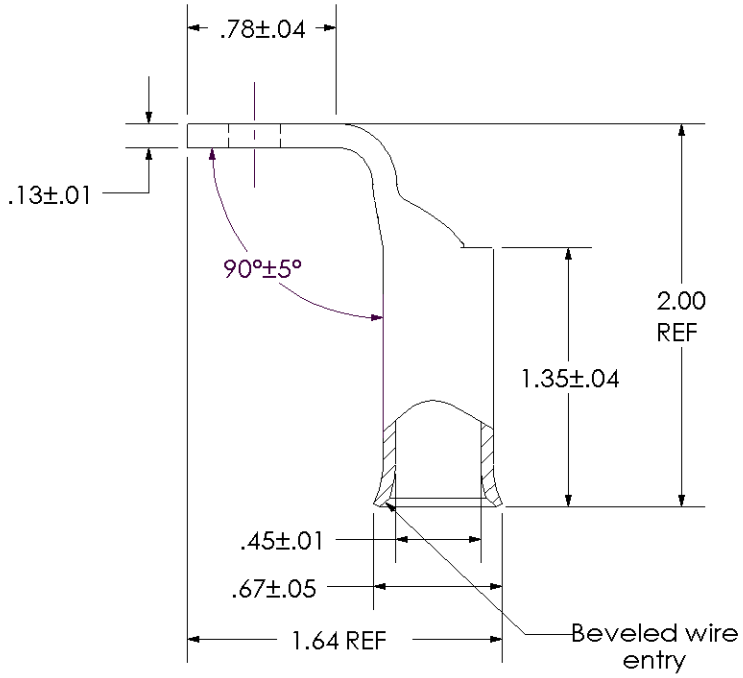

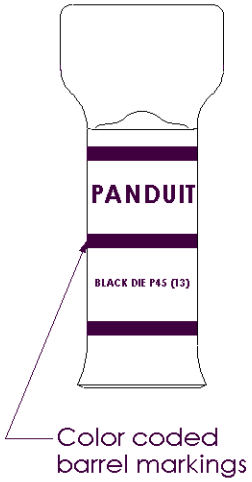

REV	DATE	BY	CHK	DESCRIPTION	ECN
00	9/02	SAB	DRL	RELEASED	10323

PANDUIT CORP. TINLEY PARK, ILLINOIS

LCAF1/0-14F-X
Copper Lug - One-Hole, Flared Barrel, 90° Angle Tongue

SCALE N/A

DRAWING NO / CAD FILE LCAF1_0-14F-CUST